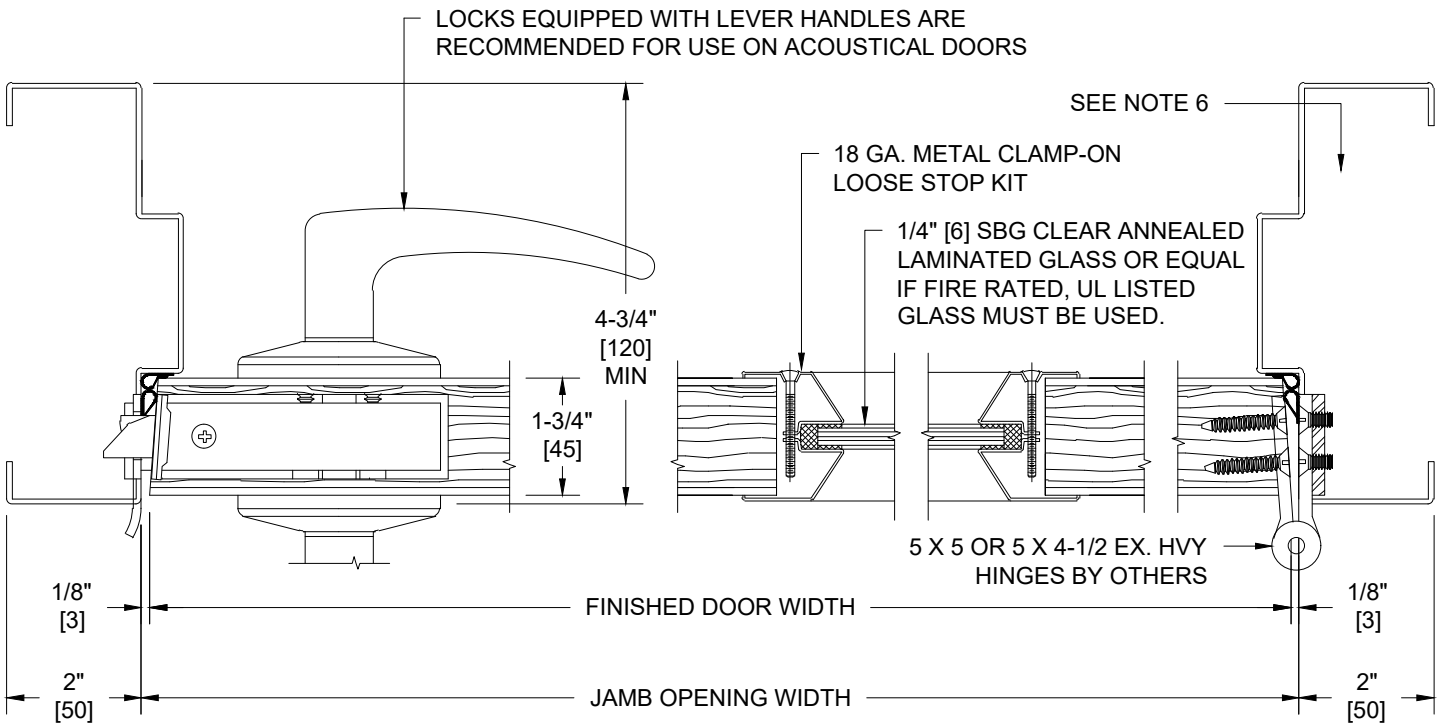

HORIZONTAL SECTION

NOTICE

THIS DRAWING AND DESIGN ARE THE PROPERTY OF THE OVERLY DOOR COMPANY. THIS DRAWING IS LOANED TO YOU SUBJECT TO THE CONDITION THAT IT SHALL NOT BE REPRODUCED, COPIED, LOANED OR OTHERWISE DISPOSED OF DIRECTLY OR INDIRECTLY. IT SHALL NOT BE USED TO FURNISH ANY INFORMATION FOR THE MAKING OF DRAWINGS, PRINTS OR APPARATUS, OR PARTS THEREOF, EXCEPT WHERE OTHERWISE SPECIFICALLY PROVIDED FOR BY CONTRACT AGREEMENT WITH THE OVERLY DOOR COMPANY.

1-3/4" Thick Single Wood Acoustical Door with Double Bubble Perimeter Seals, Butt Hinges, Lock, & Single Glazed Vision Light

OVERLY DOOR COMPANY www.overly.com

DO NOT SCALE DRAWING	
DRAWN BY/DATE:	JMC, 9/17/25, Rev 1
CONTROL NUMBER:	DET-031
FILENAME:	acs-horiz-wood-db-butts-sg.dwg