SERIES

NATIONAL STOCK NUMBER: 7110-01-475-9596

GSA

OVERLY DOOR COMPANY

574 WEST OTTERMAN STREET
POST OFFICE BOX 70
GREENSBURG, PA 15601-0070
TELEPHONE: 724-834-7300
FAX: 724-830-2871

MODEL NO. C5A-IR-K / CLASS 5 ARMORY DOOR AND FRAME ASSEMBLY TYPE IR, STYLE K, DESIGN S, RIGHT SWING WITH OPTICAL DEVICE

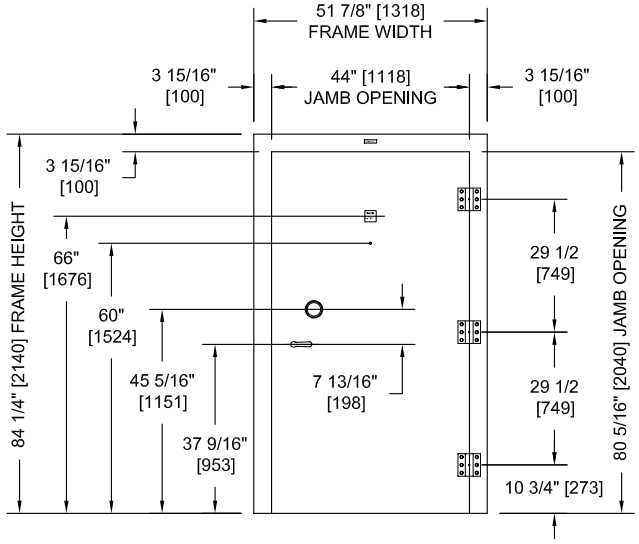

PUBLIC SIDE ELEVATION

Overly's Class 5 Security Armory Doors have been tested and approved under upgraded federal specification AA-D-600D

30	MAN-MINUTES AGAINST COVERT ENTRY
10	MAN-MINUTES AGAINST FORCED ENTRY

Shipping Weight: 1,395 lb
Net Weight: 1,225 lb

INFORMATION WE NEED TO PROCESS YOUR ORDER

1. Contract or Purchase Order Number.
2. National Stock Number.
3. Wall Thickness.
4. Swing of Day Gate (if required).
5. Packing Level A or Level C. Level C Commercial Level is Standard. If Level A Military Export is Required, Please Specify.

STANDARD HARDWARE PACKAGE

1 S&G 2937 Combination Lock
3 Overly P-800 Hinges
1 Optical Device (Peep Site)
1 Exterior Lever Handle

SECURE AREA (INTERIOR)

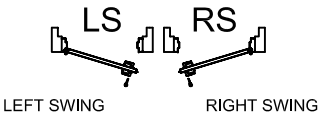

(KEY) SIDE
PUBLIC AREA (EXTERIOR)

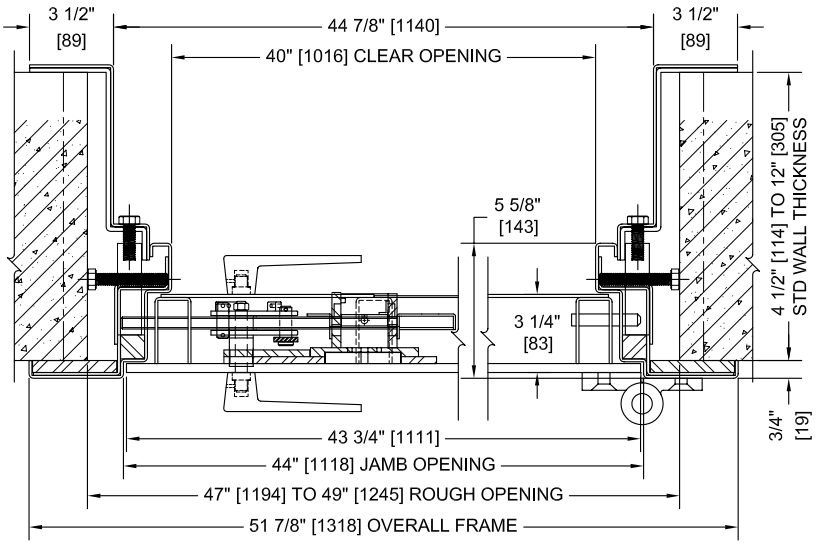

HORIZONTAL SECTION

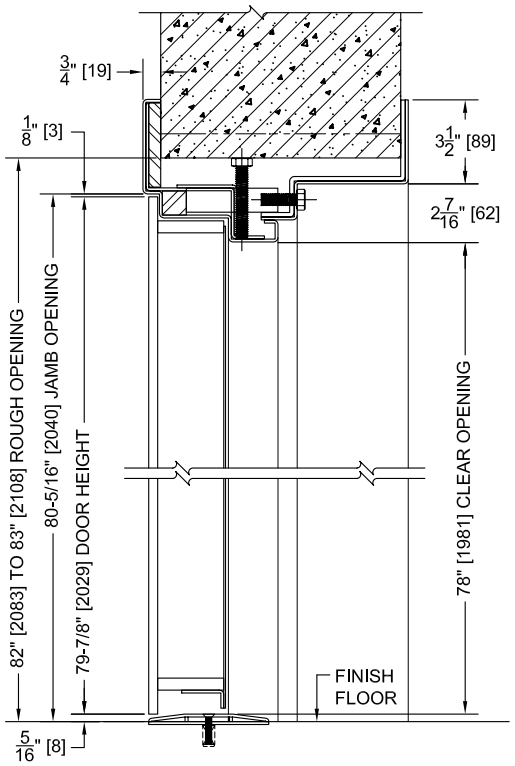

VERTICAL SECTION

ALL DIMENSIONS
BOTH IN INCHES
AND MILLIMETERS

Rev #3 5/3/2017