SERIES

WWW.OVERLY.COM

SC

OVERLY DOOR COMPANY

MODEL NO. 469509 / STC 46 / SINGLE GLAZED UL LEVEL 4 BULLET-RESISTIVE SOUND CONTROL FIXED WINDOW ASSEMBLY / NEOPRENE GLAZING

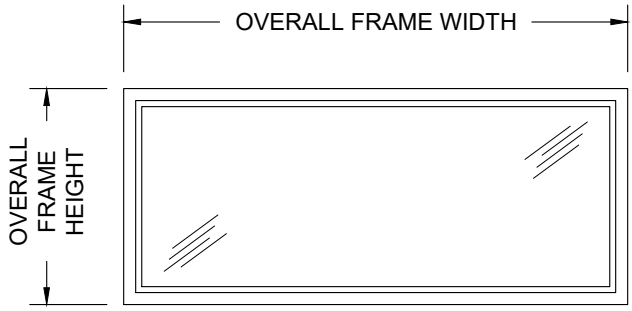

ELEVATION

NOTES:

1. All exposed surfaces of frame to receive one coat of rust inhibitive prime paint.
2. Unit weight, including frame, glass, and glazing, is 20.5 pounds per square foot.
3. Frames equipped with masonry anchors must be grouted full in field. Bolt-in type frames must have all voids in head, jambs, and sill packed with 6 to 12 pound density mineral wool.
4. Unit is glazed with one piece 2 1/8" nominal Globe-Amerada UL Level 4 (HPR) glass as tested to UL Standard for Safety 752.
5. All voids between wall and frame must be continuously caulked.

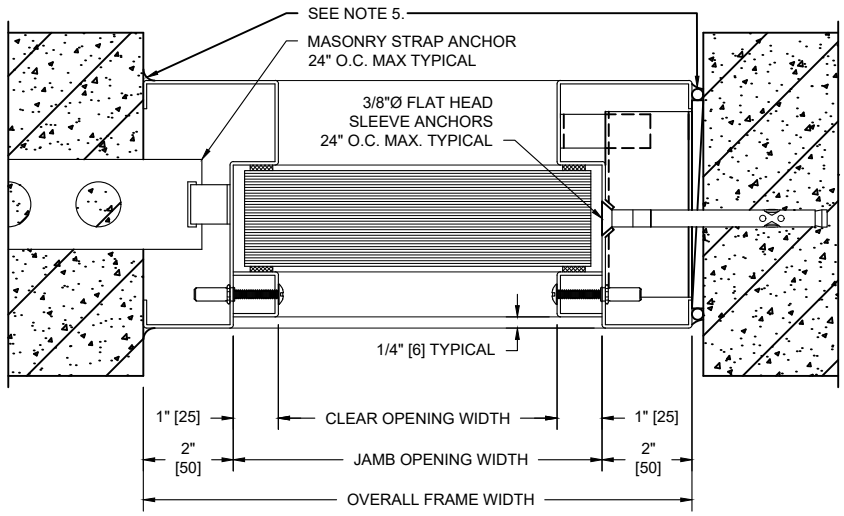

SHOWING BUILT-IN INSTALLATION IN MASONRY PARTITION

SHOWING BOLT-IN INSTALLATION IN MASONRY PARTITION

HORIZONTAL SECTION

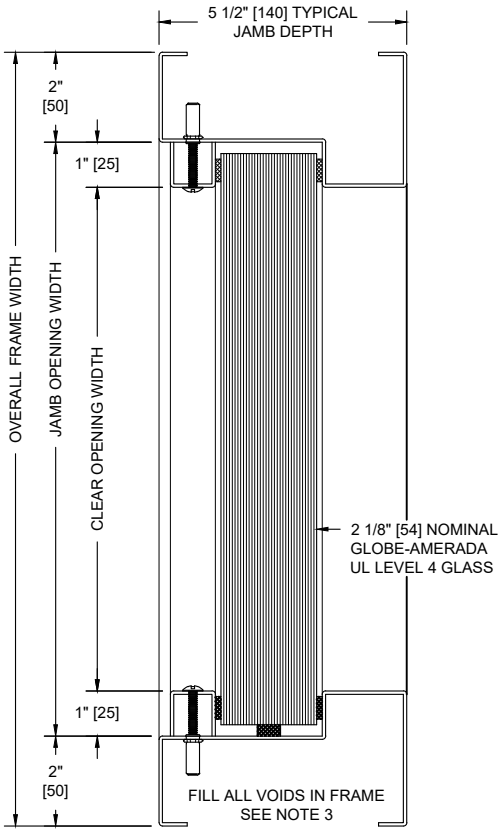

VERTICAL SECTION

SOUND TRANSMISSION LOSS IN dB AT FREQUENCY / HERTZ																	
100	125	160	200	250	315	400	500	630	800	1000	1250	1600	2000	2500	3150	4000	5000
37	35	37	40	40	34	39	40	43	45	49	53	56	59	62	65	67	69

ALL DIMENSIONS BOTH IN INCHES AND MILLIMETERS