OVERLY DOOR COMPANY
574 West Otterman Street ■ Greensburg, PA 15601
Phone: 800-979-7300 ■ Fax: 724-830-2871

ACOUSTICAL DOOR TOLERANCES

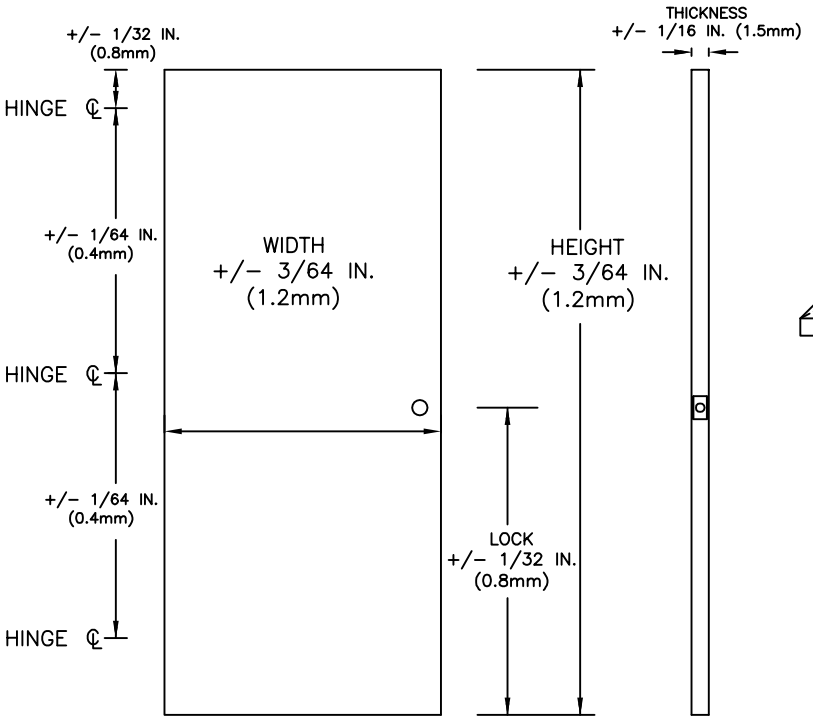

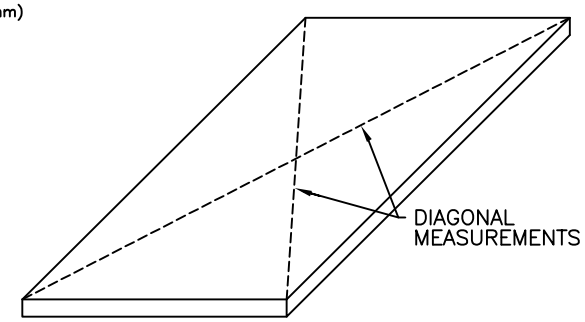

SQUARENESS
Measured diagonally from corner to corner across the face of the door. Maximum 1/16 in. (1.5mm) difference

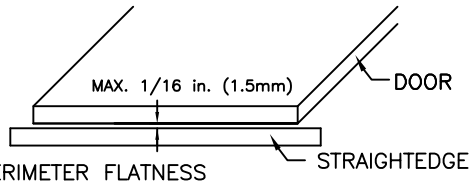

PERIMETER FLATNESS
Measured Top, Bottom, Hinge & Lock edge, on both faces of the door

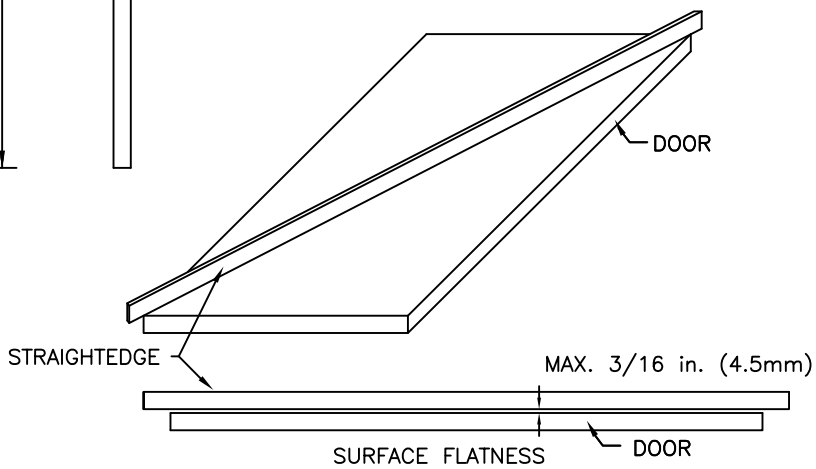

SURFACE FLATNESS
Measured corner to corner on both faces of the door

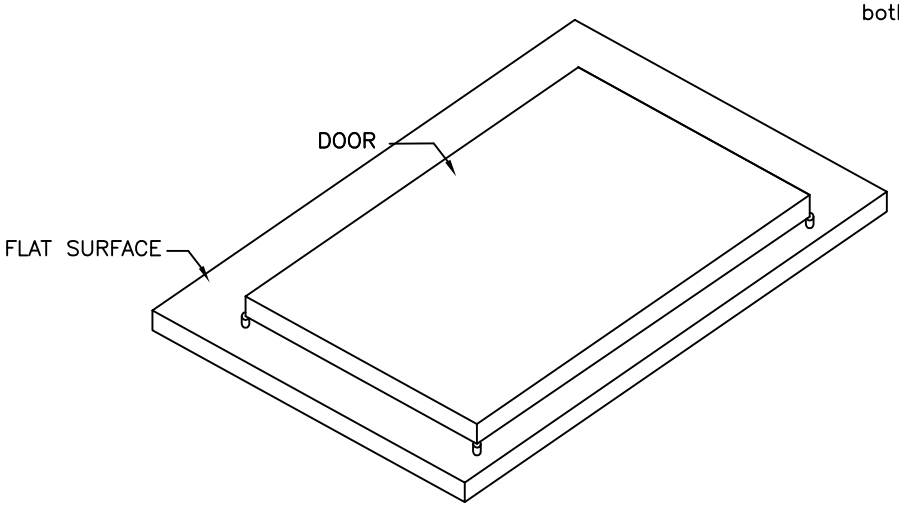

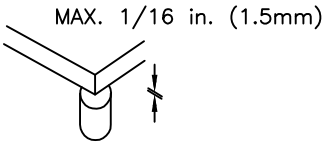

DOOR TWIST
With door supported at corners, measure gap between door and block at the remaining corner

ENGD-253 Rev#0 11/26/2012

62_6.DWG